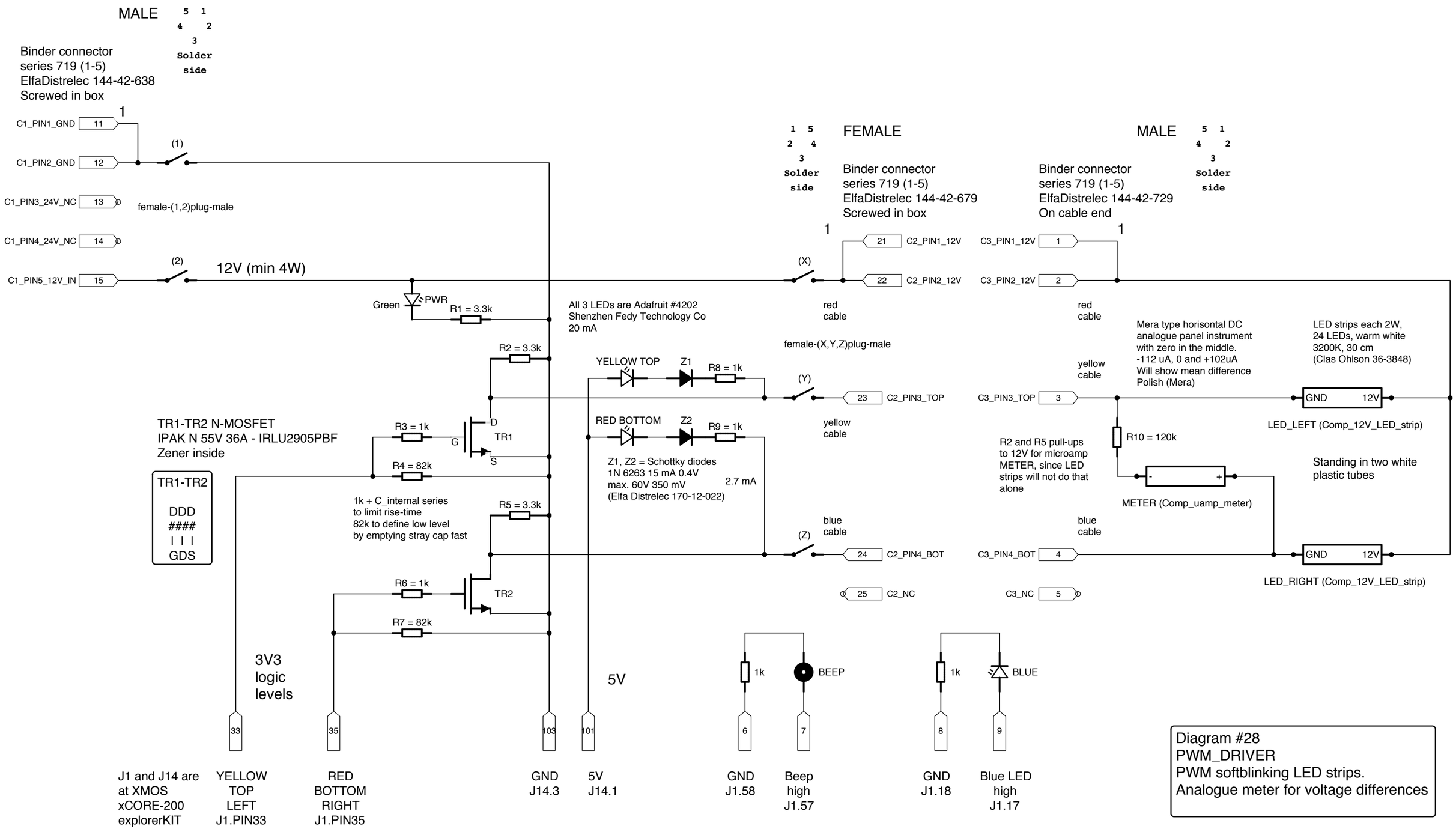

Diagram #28
PWM_DRIVER
PWM softblinking LED strips.
Analogue meter for voltage differences