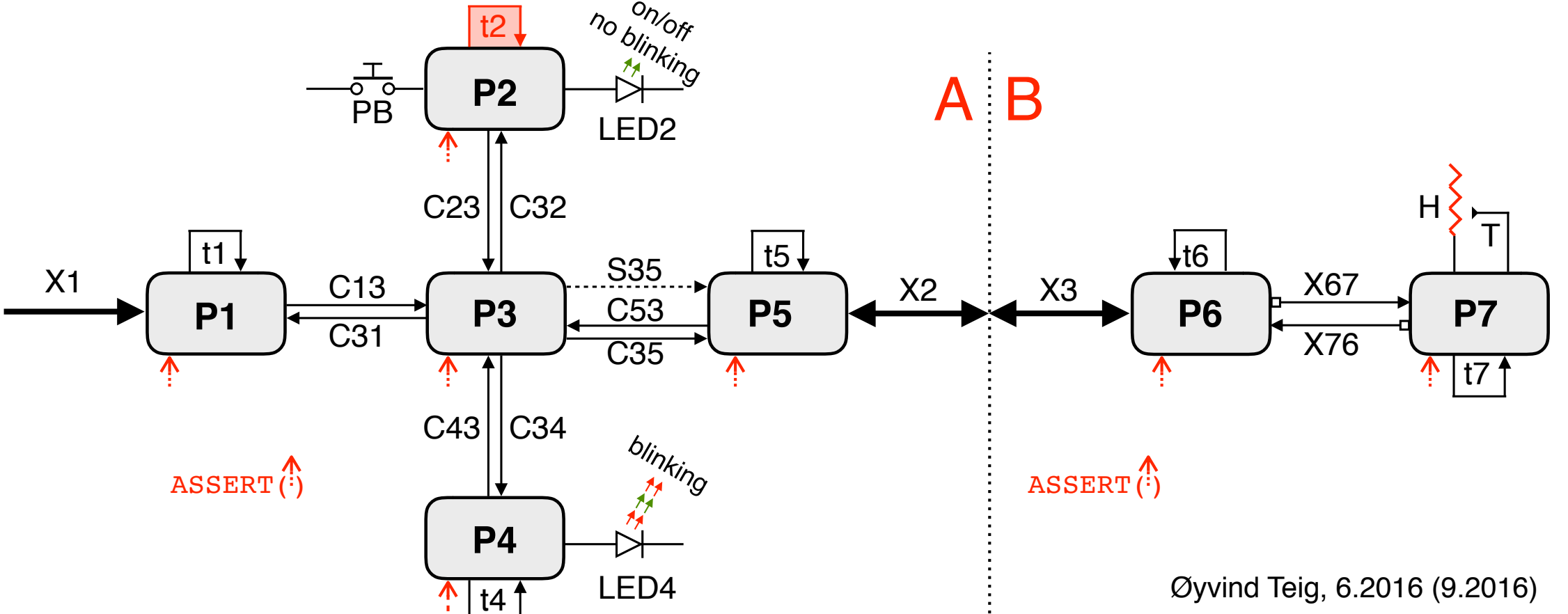
t2
on/off
no blinking
PB
P2
LED2
A
B
C23
C32
t1
X1
P1
C13
C31
P3
S35
C53
C35
t5
P5
X2
X3
t6
P6
X67
X76
P7
H
T
t7
C43
C34
ASSERT
ASSERT
blinking
P4
t4
LED4
Øyvind Teig, 6.2016 (9.2016)