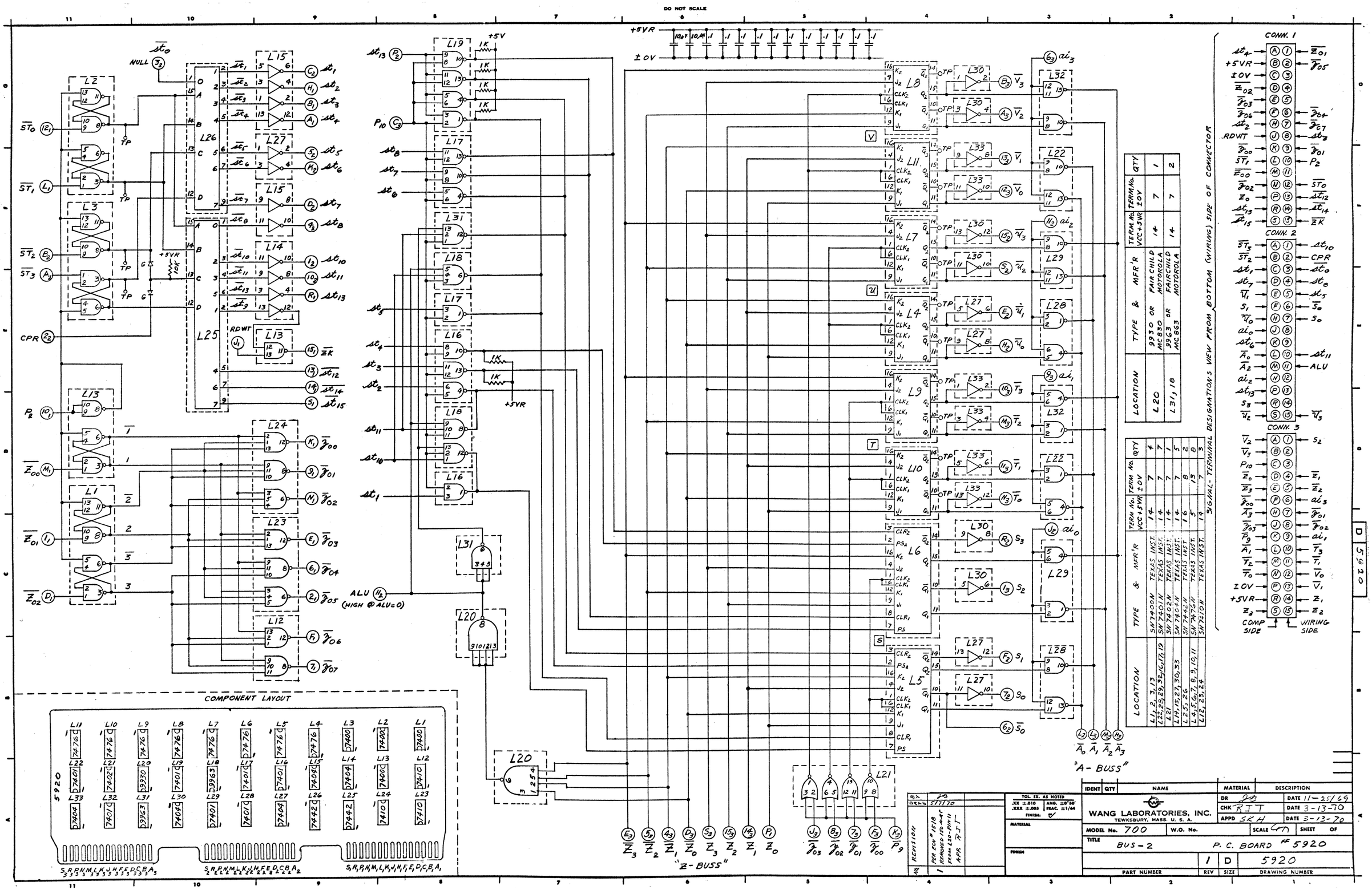

LOCATION	TYPE & MFR'R	TERM. No. VCC+5VR	TERM. No. ±0V	QTY
L20	9930 OR MC830 FAIRCHILD MOTOROLA	14	7	1
L31, 18	9963 OR MC863 FAIRCHILD MOTOROLA	14	7	2

LOCATION	TYPE & MFR'R	TERM. No. VCC+5VR	TERM. No. ±0V	QTY
L1, 2, 3, 13	SN7400N TEXAS INST.	14	7	4
L22, 28, 29, 32, 16, 17, 19	SN7401N TEXAS INST.	14	7	7
L21	SN7402N TEXAS INST.	14	7	1
L14, 15, 27, 30, 33	SN7404N TEXAS INST.	14	7	5
L25, 26	SN7442N TEXAS INST.	16	8	2
L4, 5, 6, 7, 8, 9, 10, 11	SN7476N TEXAS INST.	5	13	8
L12, 23, 24	SN7410N TEXAS INST.	14	7	3