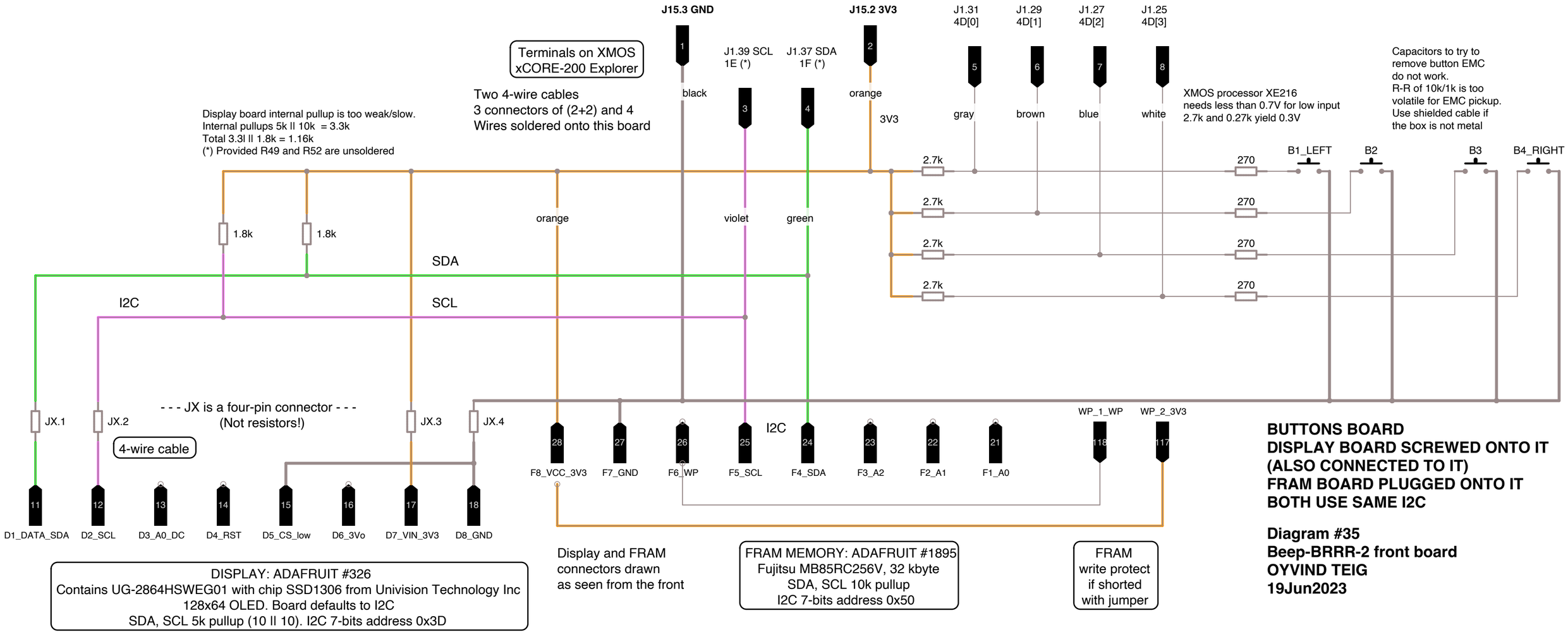


**BUTTONS BOARD**
**DISPLAY BOARD SCREWED ONTO IT**
**(ALSO CONNECTED TO IT)**
**FRAM BOARD PLUGGED ONTO IT**
**BOTH USE SAME I2C**

**Diagram #35**
**Beep-BRRR-2 front board**
**OYVIND TEIG**
**19Jun2023**