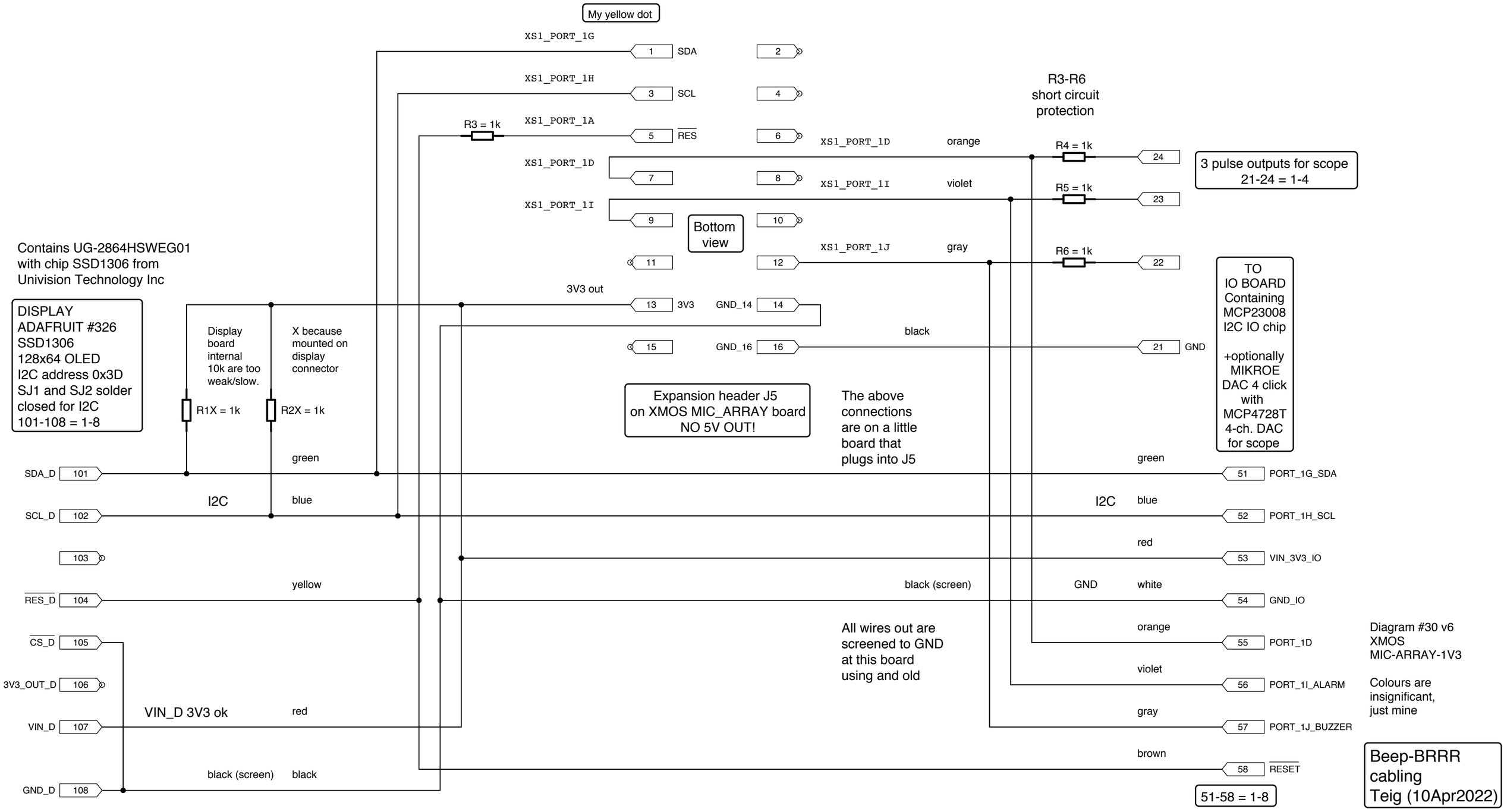
My yellow dot
XS1_PORT_1G
1 SDA
2
XS1_PORT_1H
3 SCL
4
R3 = 1k
XS1_PORT_1A
5 RES
6
XS1_PORT_1D
7
8
XS1_PORT_1I
9
10
11
12
3V3 out
13 3V3
GND_14 14
15
GND_16 16
Bottom view
R3-R6
short circuit
protection
XS1_PORT_1D orange
R4 = 1k
24
XS1_PORT_1I violet
R5 = 1k
23
XS1_PORT_1J gray
R6 = 1k
22
black
21 GND
3 pulse outputs for scope
21-24 = 1-4
Contains UG-2864HSWEG01
with chip SSD1306 from
Univision Technology Inc
DISPLAY
ADAFRUIT #326
SSD1306
128x64 OLED
I2C address 0x3D
SJ1 and SJ2 solder
closed for I2C
101-108 = 1-8
Display
board
internal
10k are too
weak/slow.
X because
mounted on
display
connector
R1X = 1k
R2X = 1k
Expansion header J5
on XMOS MIC_ARRAY board
NO 5V OUT!
The above
connections
are on a little
board that
plugs into J5
TO
IO BOARD
Containing
MCP23008
I2C IO chip
+optionally
MIKROE
DAC 4 click
with
MCP4728T
4-ch. DAC
for scope
SDA_D 101
green
51 PORT_1G_SDA
I2C
blue
SCL_D 102
I2C
blue
52 PORT_1H_SCL
103
red
53 VIN_3V3_IO
RES_D 104
yellow
black (screen)
GND
white
54 GND_IO
CS_D 105
orange
55 PORT_1D
3V3_OUT_D 106
violet
56 PORT_1I_ALARM
VIN_D 107
VIN_D 3V3 ok
red
gray
57 PORT_1J_BUZZER
GND_D 108
black (screen)
black
brown
58 RESET
All wires out are
screened to GND
at this board
using and old
51-58 = 1-8
Diagram #30 v6
XMOS
MIC-ARRAY-1V3
Colours are
insignificant,
just mine
Beep-BRRR
cabling
Teig (10Apr2022)