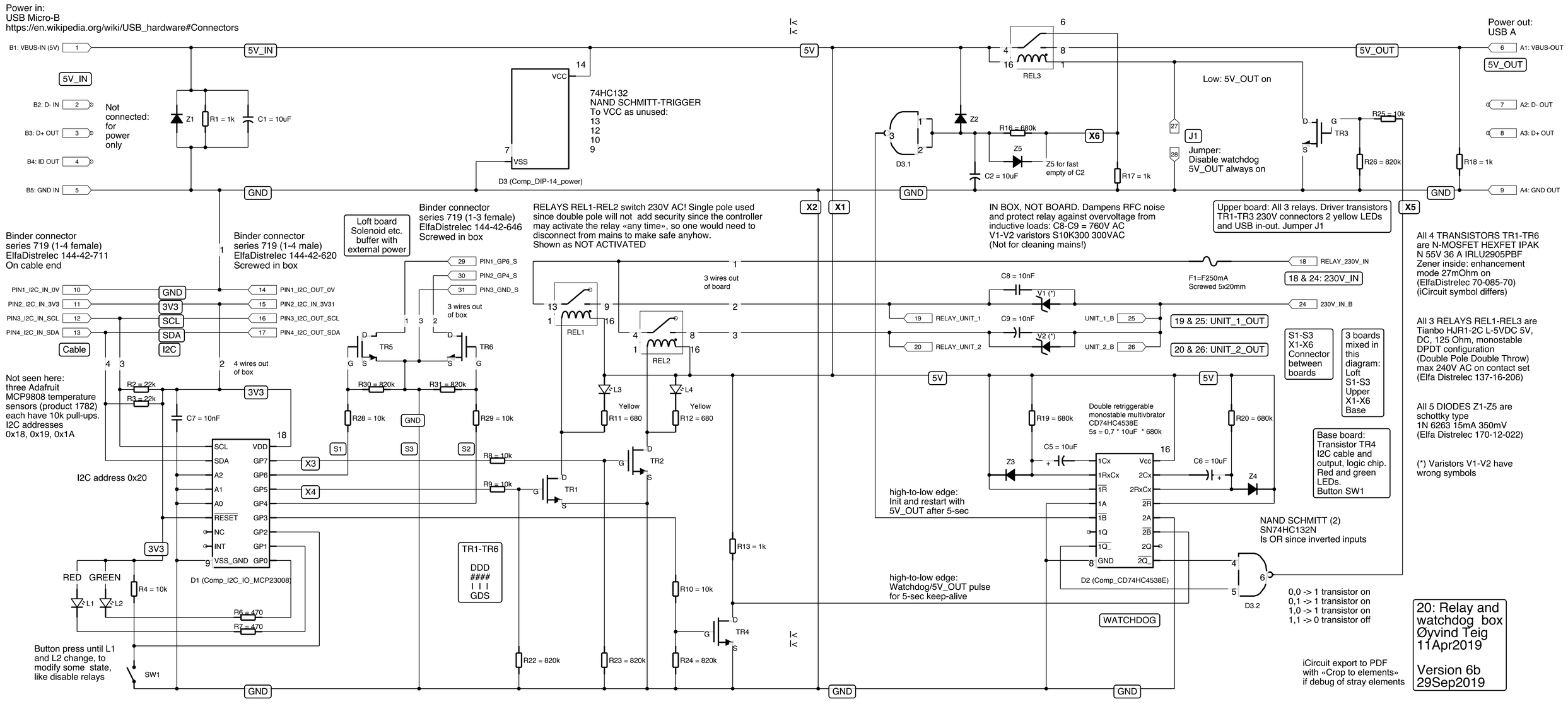
Power in:
USB Micro-B
https://en.wikipedia.org/wiki/USB_hardware#Connectors
B1: VBUS-IN (5V)
B2: D- IN
B3: D+ OUT
B4: ID OUT
B5: GND IN
5V_IN
GND
Not connected: for power only
Z1
R1 = 1k
C1 = 10uF
74HC132
NAND SCHMITT-TRIGGER
To VCC as unused:
13
12
10
9
VCC
VSS
D3 (Comp_DIP-14_power)
5V
REL3
D3.1
Z2
R16 = 680k
Z5
Z5 for fast empty of C2
C2 = 10uF
X6
R17 = 1k
Low: 5V_OUT on
J1
Jumper:
Disable watchdog
5V_OUT always on
TR3
R25 = 10k
R26 = 820k
R18 = 1k
5V_OUT
Power out:
USB A
A1: VBUS-OUT
A2: D- OUT
A3: D+ OUT
A4: GND OUT
X5
Binder connector
series 719 (1-4 female)
ElfaDistrelec 144-42-711
On cable end
PIN1_I2C_IN_0V
PIN2_I2C_IN_3V3
PIN3_I2C_IN_SCL
PIN4_I2C_IN_SDA
3V3
SCL
SDA
I2C
Cable
Binder connector
series 719 (1-4 male)
ElfaDistrelec 144-42-620
Screwed in box
PIN1_I2C_OUT_0V
PIN2_I2C_IN_3V31
PIN3_I2C_OUT_SCL
PIN4_I2C_OUT_SDA
Loft board
Solenoid etc.
buffer with
external power
Binder connector
series 719 (1-3 female)
ElfaDistrelec 144-42-646
Screwed in box
PIN1_GP6_S
PIN2_GP4_S
PIN3_GND_S
3 wires out of box
4 wires out of box
TR5
TR6
R30 = 820k
R31 = 820k
R28 = 10k
R29 = 10k
S1
S3
S2
X3
X4
R8 = 10k
R9 = 10k
TR1
TR2
RELAYS REL1-REL2 switch 230V AC! Single pole used since double pole will not add security since the controller may activate the relay «any time», so one would need to disconnect from mains to make safe anyhow.
Shown as NOT ACTIVATED
REL1
REL2
3 wires out of board
L3
L4
Yellow
R11 = 680
R12 = 680
R13 = 1k
R10 = 10k
TR4
R22 = 820k
R23 = 820k
R24 = 820k
X2
X1
IN BOX, NOT BOARD. Dampens RFC noise and protect relay against overvoltage from inductive loads: C8-C9 = 760V AC
V1-V2 varistors S10K300 300VAC
(Not for cleaning mains!)
C8 = 10nF
C9 = 10nF
V1 (*)
V2 (*)
RELAY_230V_IN
F1=F250mA
Screwed 5x20mm
18 & 24: 230V_IN
230V_IN_B
RELAY_UNIT_1
RELAY_UNIT_2
UNIT_1_B
UNIT_2_B
19 & 25: UNIT_1_OUT
20 & 26: UNIT_2_OUT
Upper board: All 3 relays. Driver transistors TR1-TR3 230V connectors 2 yellow LEDs and USB in-out. Jumper J1
All 4 TRANSISTORS TR1-TR6 are N-MOSFET HEXFET IPAK N 55V 36 A IRLU2905PBF Zener inside: enhancement mode 27mOhm on (ElfaDistrelec 70-085-70) (iCircuit symbol differs)
All 3 RELAYS REL1-REL3 are Tianbo HJR1-2C L-5VDC 5V, DC, 125 Ohm, monostable DPDT configuration (Double Pole Double Throw) max 240V AC on contact set (Elfa Distrelec 137-16-206)
All 5 DIODES Z1-Z5 are schottky type 1N 6263 15mA 350mV (Elfa Distrelec 170-12-022)
(*) Varistors V1-V2 have wrong symbols
S1-S3
X1-X6
Connector between boards
3 boards mixed in this diagram:
Loft
S1-S3
Upper
X1-X6
Base
Base board:
Transistor TR4
I2C cable and output, logic chip.
Red and green LEDs.
Button SW1
Not seen here:
three Adafruit MCP9808 temperature sensors (product 1782) each have 10k pull-ups.
I2C addresses
0x18, 0x19, 0x1A
R2 = 22k
R3 = 22k
C7 = 10nF
I2C address 0x20
SCL
SDA
A2
A1
A0
RESET
NC
INT
VSS_GND
VDD
GP7
GP6
GP5
GP4
GP3
GP2
GP1
GP0
D1 (Comp_I2C_IO_MCP23008)
RED
GREEN
L1
L2
R4 = 10k
R6 = 470
R7 = 470
Button press until L1 and L2 change, to modify some state, like disable relays
SW1
TR1-TR6
DDD
####
| | |
GDS
Double retriggerable monostable multivibrator
CD74HC4538E
5s = 0,7 * 10uF * 680k
R19 = 680k
R20 = 680k
C5 = 10uF
C6 = 10uF
Z3
Z4
1Cx
1RxCx
1R
1A
1B
1Q
1Q_
GND
Vcc
2Cx
2RxCx
2R
2A
2B
2Q
2Q_
D2 (Comp_CD74HC4538E)
high-to-low edge:
Init and restart with
5V_OUT after 5-sec
high-to-low edge:
Watchdog/5V_OUT pulse
for 5-sec keep-alive
WATCHDOG
NAND SCHMITT (2)
SN74HC132N
Is OR since inverted inputs
D3.2
0,0 -> 1 transistor on
0,1 -> 1 transistor on
1,0 -> 1 transistor on
1,1 -> 0 transistor off
iCircuit export to PDF
with «Crop to elements»
if debug of stray elements
20: Relay and
watchdog box
Øyvind Teig
11Apr2019
Version 6b
29Sep2019